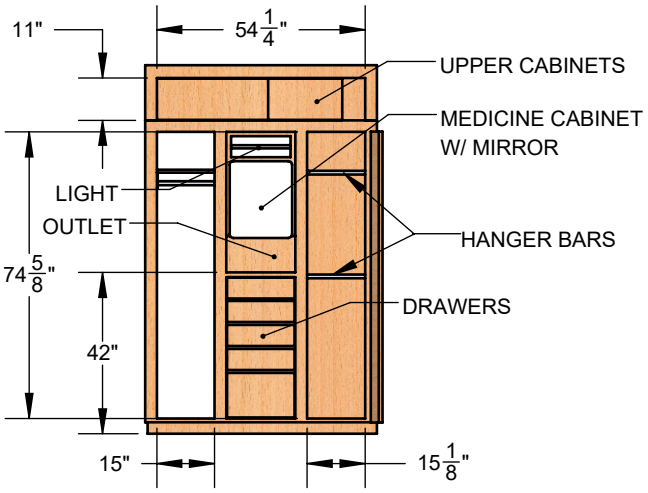

WARDROBE DETAIL
24" DEPTH

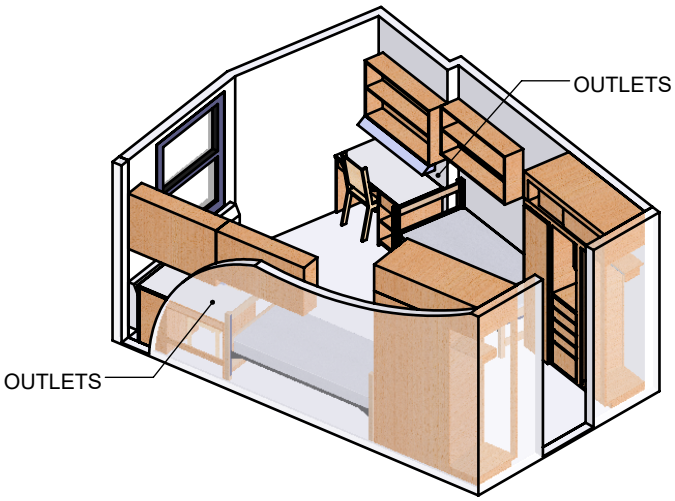

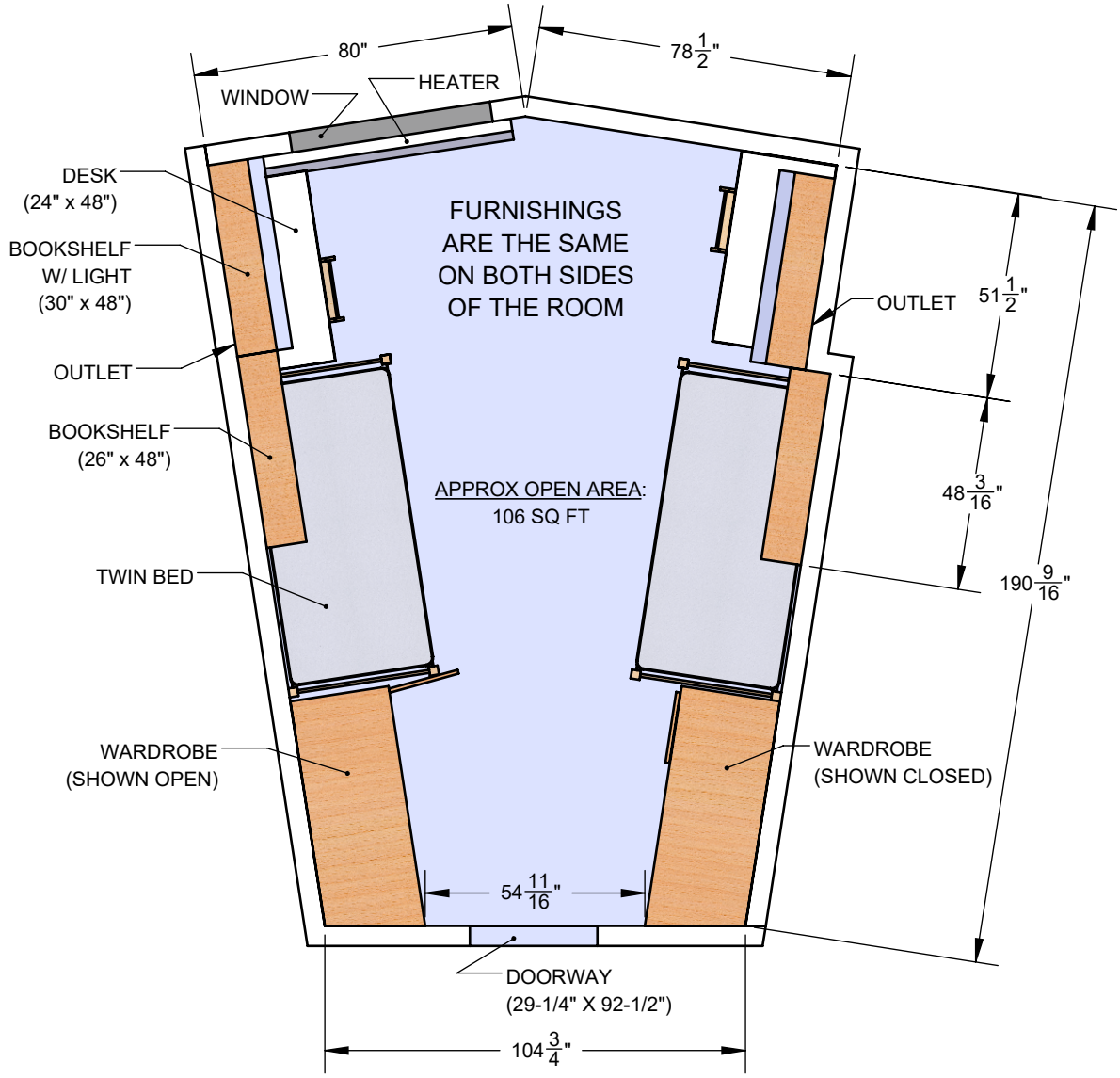

REVISION LOG	DATE	BY

DRESSLER HALL - TYP. DOUBLE OCCUPANCY ROOM

DR. GJB 12.26.17

EWU RES. HALL FLOOR PLAN

B0003E
SHT. 1 OF 1

MADE IN SOLIDWORKS